Installation, Operation and Maintenance Manual

PN 750-0064-REV. 44

TransEnd™

Surge Suppression Filter Systems

TransEnd **100**
TransEnd **80**
TransEnd **50**
TransEnd **25**

JOSLYN®
BY THOMAS & BETTS POWER SOLUTIONS

Your Guide to Installation of the Joslyn TransEnd Surge Suppression System

Today's sophisticated electronic equipment requires superior suppression filter systems. By selecting Joslyn® TransEnd™ devices, you have taken a critical step toward decreasing downtime and ensuring longer product life for your equipment.

TransEnd is designed to protect facilities and sensitive electrical and electronic equipment against the harmful effects of lightning strikes and internally generated electrical transients. These reliable surge protection devices fulfill the single-pulse surge current capacity testing recommendations per NEMA LS-1, 1992, sections 2.2.9 and 3.9.

The Joslyn TransEnd combines easy installation with many special features to deliver more performance than any other device in its class.

TransEnd is conveniently pre-wired with 24-inch, stranded #10 AWG pigtail conductors. To ensure optimum product performance, install your TransEnd system in a location that minimizes wire lengths and wire bends. This positioning maximizes surge suppression and filtering while providing added protection for the connected loads.

Thank you for choosing the Joslyn TransEnd Surge Suppression System. We look forward to fulfilling your facility-wide surge suppression filter system needs.

Installation Assistance

Monday through Friday, 8:00 a.m. to 5:00 p.m. (EST):
800.238.5000 or 804.236.3300

Five-Year Limited Warranty

Joslyn's TransEnd products are warranted for a period of five years from date of purchase.

Patent Notice

The Joslyn TransEnd is protected by patents which may be issued after the publication of this document, as well as by one or more of the following patents: 5,023,746; 4,835,650; 4,675,538; 4,675,772; 5,191,502; 4,860,502; 4,127,888; 5,146,357; 4,794,490; 5,257,157. Current Technology, Inc. will enforce and protect its patent rights as provided by Section 35 USC and a $500,000 litigation protection insurance policy.

© 2007 Joslyn® and TransEnd™. All Rights Reserved. Printed in the U.S.A.

Purpose and Applications of TransEnd Products

The versatile TransEnd product family is designed for facility-wide installation. TransEnd uses proven Metal Oxide Varistors (MOVs) and an efficient capacitive filter system to reduce or eliminate transients, impulses and high-frequency noise within a building's electrical system.

The Importance of Correct Installation

This manual provides guidelines for the proper installation of TransEnd devices. Proper product selection and compliance with these guidelines will help your new suppression system provide years of reliable service. If installers are unsure about the facility's electrical configuration or have other installation-related questions, we recommend they consult with a master electrician or other qualified electrical professional.

When shortcuts are taken or installation procedures are not followed, the TransEnd system may be damaged or may not provide adequate protection. Improper installation may also void the warranty. It is extremely important to follow these installation procedures carefully.

This manual is designed to step you through the easy installation procedures. However, should you have questions about installing TransEnd, please call Joslyn Technical Support at 800.238.5000.

W A R N I N G !

WARNING! The TransEnd's Warranty is voided if the unit is damaged as a result of improper installation or the installer's failure to verify the following conditions prior to installation.

Pre-Installation Checklist

➤ Confirm that the voltage(s) and power configuration shown on the TransEnd product label are consistent with the voltage and service configuration at the TransEnd installation site. One of the following voltage and service configurations is printed on the label affixed to the TransEnd:

Product Label Designation	System Voltage, Service Configuration
XNxxx-120/240-2G	120/240VAC, 1ø 3-wire SPLIT-PHASE, w/ground
XNxxx-120/208-3GY	120/208VAC, 3ø 4-wire WYE, w/ground
XNxxx-220/380-3GY	220/380VAC, 3ø 4-wire WYE, w/ground
XNxxx-277/480-3GY	277/480VAC, 3ø 4-wire WYE, w/ground
XNxxx-120/240-3GHD	120/240VAC, 3ø , high-leg DELTA, w/ground (B phase must be 208V)
XNxxx-240-3DG	240VAC, 3ø , 3-wire DELTA, w/ground
XNxxx-380-3DG	380VAC, 3ø , 3-wire DELTA, w/ground
XNxxx-480-3DG	480VAC, 3ø , 3-wire DELTA, w/ground

xxx Denotes product's surge current rating.

Pre-Installation Checklist (cont.)

➤ Check to ensure that a proper Xo bond is installed between the neutral and ground terminals at the transformer upstream from all 3ø WYE, 3ø high-leg DELTA, or 1ø SPLIT-PHASE TransEnd devices (see NEC article 250.) Lack of a proper bond will damage the TransEnd and void the warranty.

➤ Confirm that the environmental conditions are consistent with these ranges:

Ambient Temperature: The TransEnd must be installed in an area with a temperature between -40° and +140° F (-40°and +60° C.)

Humidity: The TransEnd must be installed in an area with relative humidity between 5% and 95%, noncondensing.

W A R N I N G !

WARNING! Discontinue installation if (1) your conditions are inconsistent with the guidelines above or (2) your conditions cannot be verified. Call Joslyn Technical Support at 800.238.5000, if you have any questions.

Installation Methods for Common Service Configurations

TransEnd is to be connected in parallel with the electrical system and must be fed by an overcurrent protection device (20A circuit breaker or fuse) in a power distribution panel.

Figures 1-4 show the relationship between the TransEnd device and these four basic service configurations: WYE, DELTA, High-Leg DELTA and SPLIT-PHASE.

FIG. 1: 3-Phase, 4-Wire WYE

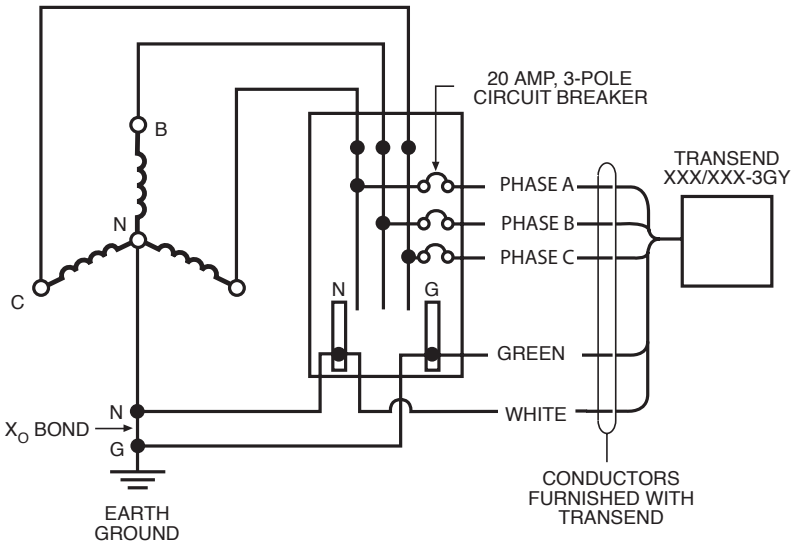

Installation Methods for Common Service Configurations

FIG. 2:
3-Phase, 3-Wire DELTA

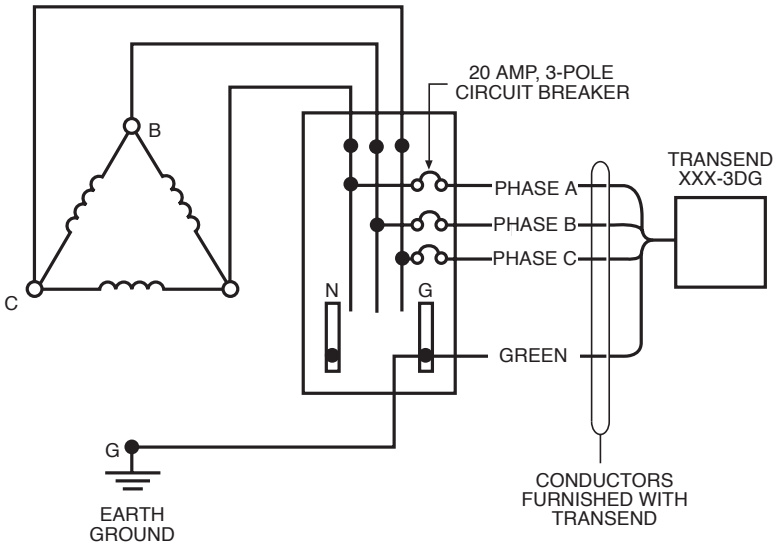

FIG. 3:
3-Phase, 4-Wire, High-Leg DELTA

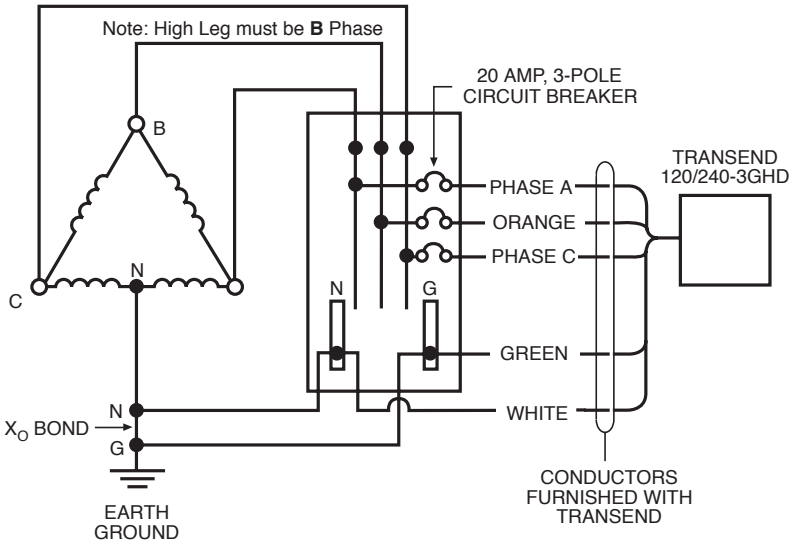

FIG. 4:
1-Phase, 3-Wire
SPLIT-PHASE

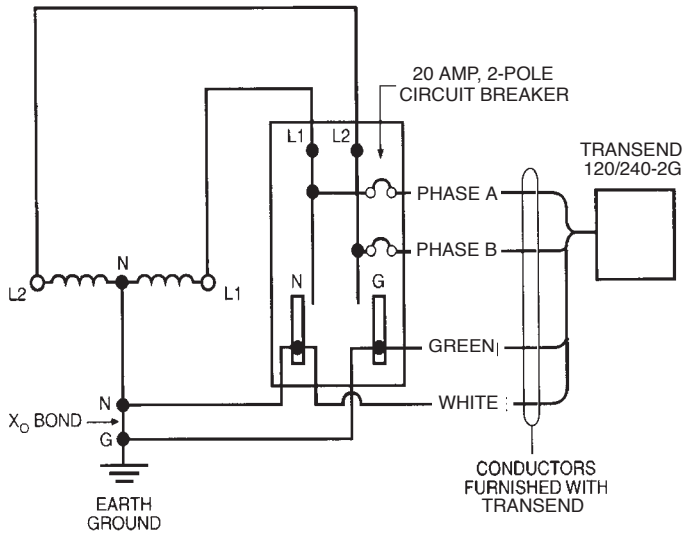

Mounting
Four 5/16-inch holes are provided for mounting the TransEnd

FiG. 5
Mounting Hole Detail

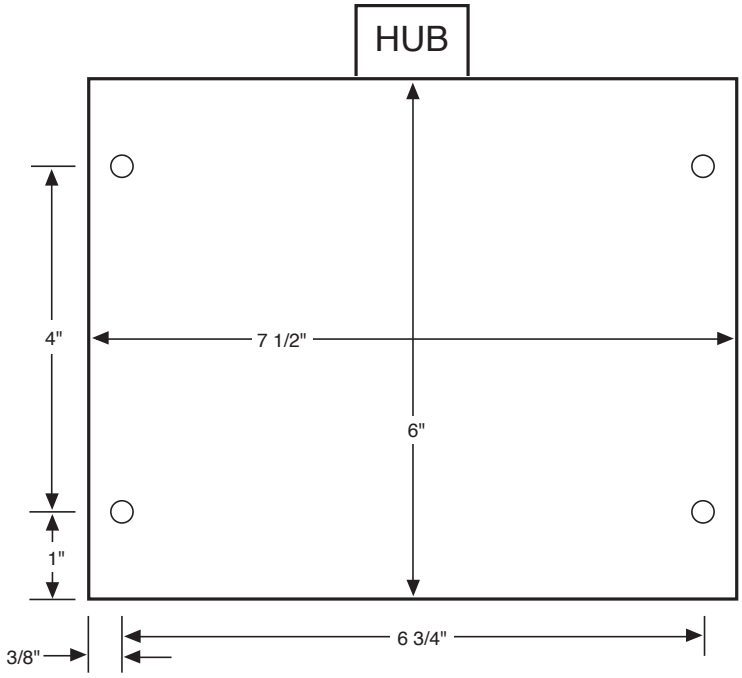

WARNING!

Electrical Connections

WARNING! Be sure power is off before terminating the TransEnd leads.

Raceway: To route TransEnd conductors to the panel being protected, choose from any of these materials: (1) non-metallic flexible conduit, (2) metallic flexible conduit, (3) rigid conduit or (4) a nipple. The TransEnd enclosure is provided standard with a 3/4-inch hub which will accept rigid or IMC conduit. A plastic flexible conduit with fitting and a 3-inch nipple are available as options.

Wire length: Use the supplied 24-inch, #10 AWG leads. Trim leads to suit the application but do NOT splice to add length to the leads. Refer to Figures 1 through 4 for the color code of the TransEnd leads. Terminate the leads as shown. (Note: *For optimum performance, keep leads as short as possible and avoid sharp bends*.)

Overcurrent protection: TransEnd leads must be protected with an over-current protection device (circuit breaker or fuse) rated at 20 amps. Use a 3-pole breaker for 3-phase units or a 2-pole breaker for single-phase units.

Dry Contacts: For TransEnd units with optional Form "C" dry contacts, use butt splices within the panelboard to connect the Form "C" leads to the user's monitoring circuits. Alternatively, install a junction box between the TransEnd and the panelboard to connect Form "C" leads to user's monitoring circuits. (See Fig. 6 under "Options," page 8). Consult applicable local codes to ensure proper installation.

Before Applying Power: Checklist

➤ Measure the line to line voltage at the panel to be protected and be sure it is within ±10% of rated line to line voltage of the TransEnd. Use the following table to determine the range of acceptable voltage for each model of TransEnd.

Acceptable Voltage Ranges for All TransEnd Models

TRANSEND MODEL NO	NOMINAL L-L VOLTAGE	-10% to +10% L-L VOLTAGE
XNxxx-120/240-2G	240	216 to 264
XNxxx-120/208-3GY	208	188 to 228
XNxxx-220/380-3GY	380	342 to 418
XNxxx-277/480-3GY	480	432 to 528
XNxxx-120/240-3GHD	240	216 to 264
XNxxx-240-3DG	240	216 to 264
XNxxx-380-3DG	380	342 to 418
XNxxx-480-3DG	480	432 to 528

WARNING! Do not apply power if the measured voltage is not within the range specified for the TransEnd model being installed. Do not hi-pot the electrical system that the TransEnd is connected to without disconnecting all TransEnd conductors including phases, neutral and ground.

Applying Power: Checklist

➤ Apply power to unit by closing the circuit breaker.
➤ Check TransEnd lights. Protection is active when all lights are illuminated.

Troubleshooting

Call Joslyn Technical Support if you experience either of these conditions:

- Circuit breaker trips and cannot be reset
- One or more lights on TransEnd are not illuminated

Our staff is available to support you around the clock. Monday through Friday, 8:00 a.m. to 5:00 p.m. (EST), call 800.238.5000 or 804.236.3300.

Options

The TransEnd is available with these options:

- Form "C" dry contacts for remote monitoring. Upon failure of any phase, the relay's N.O. and N.C. contacts will change state. The contacts are rated at 110VDC/125VAC with maximum switching power of 30W DC/62.5VA AC.
- 18 inches of 3/4-inch nonmetallic flexible conduit and a fitting that connects to the provided 3/4-inch hub.
- 3/4-inch x 3-inch nipple that connects to the provided 3/4-inch hub.

FIG. 6
Detail of optional Form "C" contacts

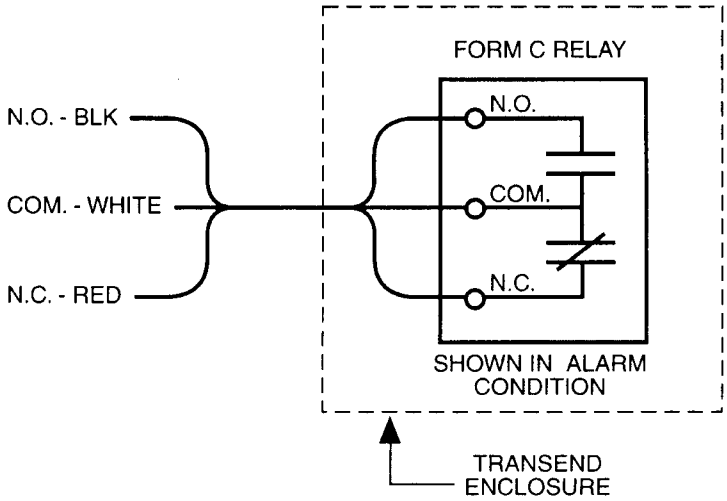

Operation/Maintenance

The only operational verification necessary on the TransEnd is to observe that the lights are illuminated. There is no maintenance to be performed on the TransEnd nor does the TransEnd contain any user-serviceable parts.

PN 750-0064-Rev. 44
KK/1K/10.24.07